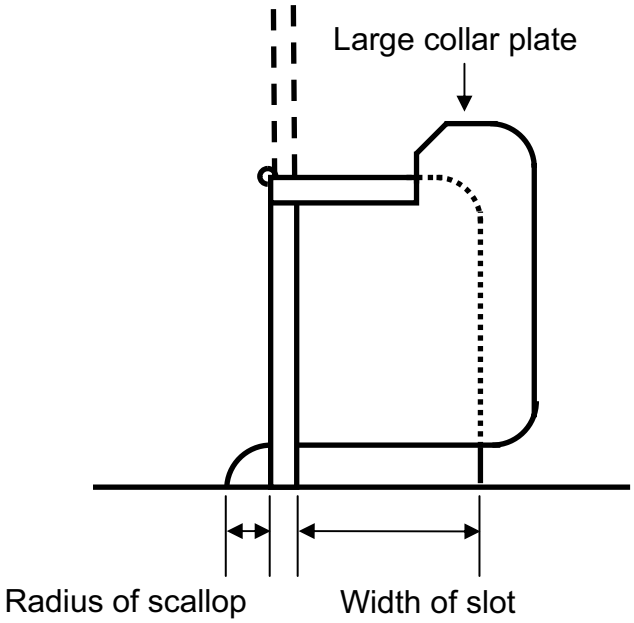KC#866