KC#497
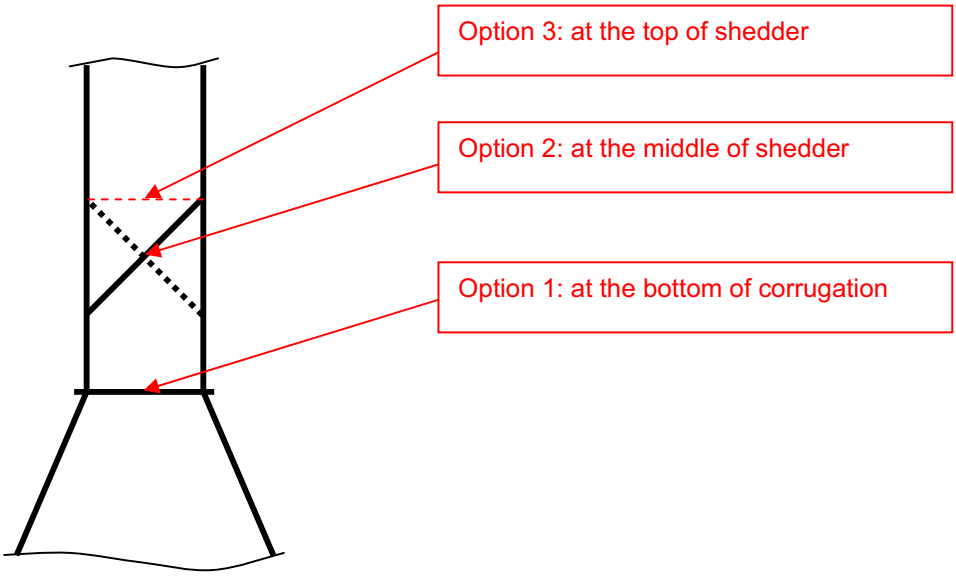
Where is the pressure point to be used for scantling check of corrugation web? Please note that option 1 is inside the gusset/shedder. Therefore, eventually there is no pressure.